CL.1 Bath spout without diverter for deck mounting - Chrome

13 612 705 Product version from 5/27/2021

We reserve the right to change designs, product range and technical specifications without prior notice.
More information can be found at: www.dornbracht.com +49 (0) 2371 8899 900 mail@dornbracht.com

13 612 705 Product version from 5/27/2021

CL.1 Bath spout without diverter for deck mounting - Chrome

13 612 705 Product version from 5/27/2021

mm [inches]

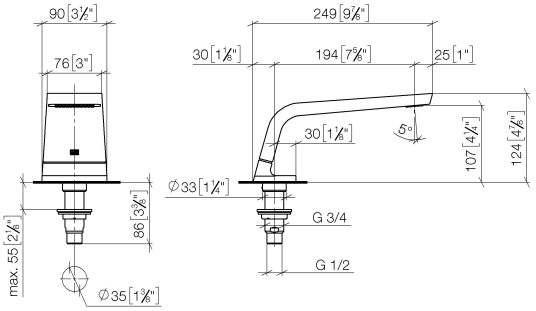

Flow rate chart

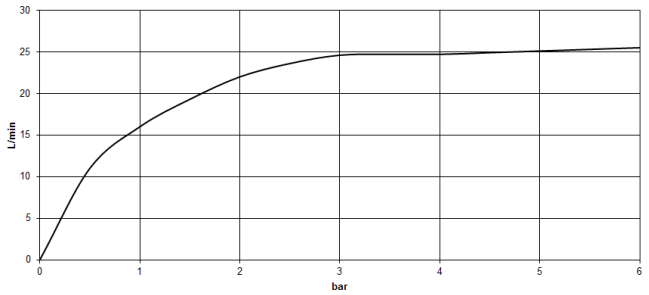

Certificates

WRAS_1512 LGA_28 IAPMO_4976

CL.1 Bath spout without diverter for deck mounting - Chrome

13 612 705 Product version from 5/27/2021

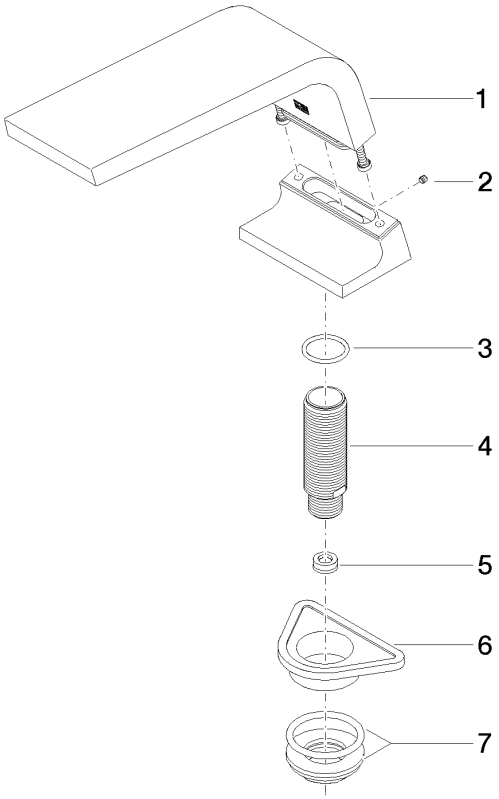

Spare parts list

No.	Item Number	Name	Quantity used	Delivery time
1	90 11 70 007 00-00	spout	1	10
2	09 31 11 099 90	pin	1	2
3	09 14 10 009 90	seal	1	2
4	09 30 01 117 90	connection	1	2
5	09 23 01 057 90	flow reducer	1	2
6	09 18 40 090 90	sleeve	1	2
7	04 23 10 004 03 90	fixing set	1	2

We reserve the right to change designs, product range and technical specifications without prior notice.
More information can be found at: www.dornbracht.com +49 (0) 2371 8899 900 mail@dornbracht.com